STEERING

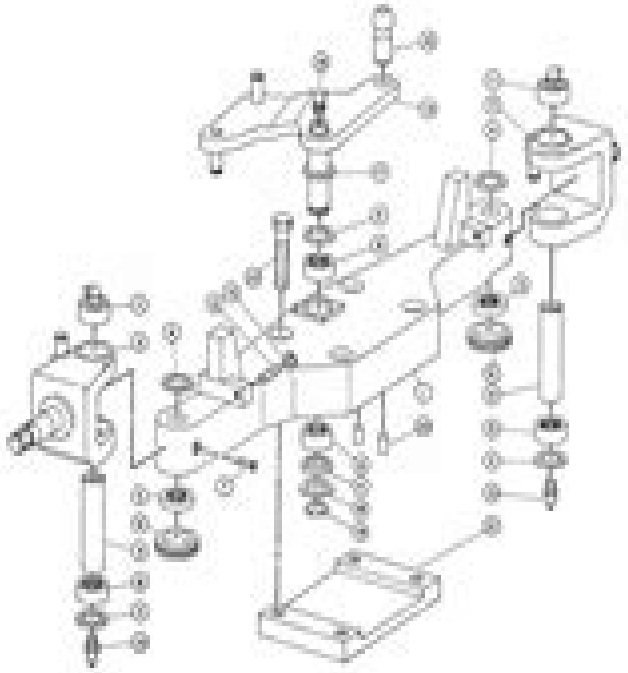

STEER AXLE GROUP

T-[illegible]

Ref No.	Part Number	DESCRIPTION	Qty
	93479	STEER AXLE ASSEMBLY	1
1	93480	BEAM	1
2	341044	KNUCKLE AS. (Right)	1
3	341045	KNUCKLE AS. (Left)	1
4	89645	SEAL	6
5	89643	BEARING	2
6	301916	SEAL	2
7	50454	SCREW	2
8	A-3103	BEARING	4
9	93498	PIN	2
10	313187	FITTING	2
11	301896	BEARING	
12	517595	BOLT	2
13	105117	NUT	2
14	341039	LEVER AS.	1
15	93467	STUD	1
16	303296	FITTING	1
17	93459	WASHER	1
18	93500	SPACER	1
19	1J6474	RING	1
20	310051	PIN	2
21	93502	PLATE	1
22	329677	BOLT	4

STEERING

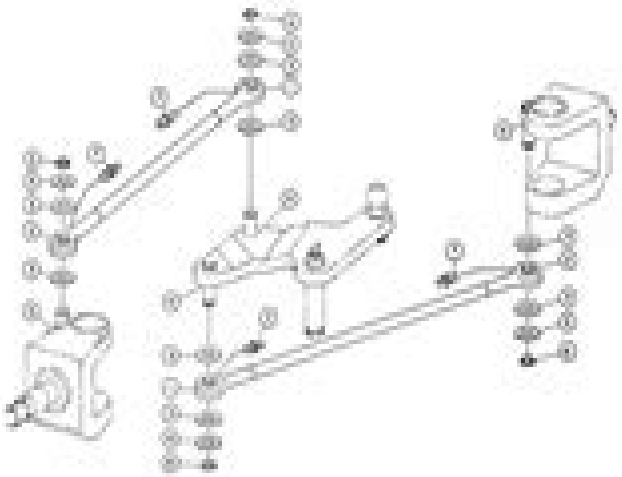

STEER AXLE LINKAGE GROUP

T-[illegible]

Ref No.	Part Number	DESCRIPTION	Qty
	93503	TIE ROD ASSEMBLY	2
1	455	ROD	2
2	93502	BUSHING	2
3	374550	SHIM PACK KIT	1
4	94030	PACK, SHIM	AR
5	94089	WASHER	4
6	343177	RING	4
	374758	SHIM	3
	374759	SHIM	3
7	313187	FITTING	4

Caterpillar Forklift T50b Need Serial Number Service Manual

Mike Jess

Caterpillar Forklift T50b Need Serial Number Service Manual:

Service Manual Caterpillar Inc,1990 **Service Manual** Caterpillar Inc,1990 **Service Manual for Caterpillar No.933 Traxcavator** ,1968 **Service Manual for Caterpillar D4 Tractor, Serial Numbers 78A1-UP.** Caterpillar Tractor Company,196? *Service Manual* Caterpillar Inc,1991 Service Manual for Caterpillar No. 12 Motor Grader ,1961* **Service Manual** Caterpillar Inc,1991 *Service Manual for Caterpillar D8 Tractor* Tractor Company Caterpillar, Service Manual for Caterpillar 824 Tractor, Serial Numbers 36H1-UP. ,1965 **Service Manual** Caterpillar Inc,1990 *Service Manual for Caterpillar DW20 Tractor* Caterpillar Tractor Company,1960* **Caterpillar Service Manual** Caterpillar Inc,1979 *Service Manual* Caterpillar Inc,1990 *Service Manual for Caterpillar 572 Pipelayer* Tractor Company Caterpillar, **Service Manual for Caterpillar D6 Tractor** Caterpillar Tractor Company,1965* Service Manual for Caterpillar S72 Pipelayer ,1964 **Service Manual for Caterpillar D9 Tractor, Serial Numbers 66A3266-UP.** Caterpillar Tractor Company,1963 Service Manual Caterpillar Tractor Company (U.S.A),1983 *Caterpillar 3406e Service Shop Manual 5ek 6ts Cat* ,1999-01-15 Caterpillar Service Manual ,1978

Embark on a breathtaking journey through nature and adventure with is mesmerizing ebook, Witness the Wonders in **Caterpillar Forklift T50b Need Serial Number Service Manual** . This immersive experience, available for download in a PDF format (PDF Size: *), transports you to the heart of natural marvels and thrilling escapades. Download now and let the adventure begin!

https://www.portal.goodeyes.com/results/scholarship/default.aspx/D6414015811full1_001123txt.pdf

Table of Contents Caterpillar Forklift T50b Need Serial Number Service Manual

1. Understanding the eBook Caterpillar Forklift T50b Need Serial Number Service Manual
    - The Rise of Digital Reading Caterpillar Forklift T50b Need Serial Number Service Manual
    - Advantages of eBooks Over Traditional Books
2. Identifying Caterpillar Forklift T50b Need Serial Number Service Manual
    - Exploring Different Genres
    - Considering Fiction vs. Non-Fiction
    - Determining Your Reading Goals
3. Choosing the Right eBook Platform
    - Popular eBook Platforms
    - Features to Look for in an Caterpillar Forklift T50b Need Serial Number Service Manual
    - User-Friendly Interface
4. Exploring eBook Recommendations from Caterpillar Forklift T50b Need Serial Number Service Manual
    - Personalized Recommendations
    - Caterpillar Forklift T50b Need Serial Number Service Manual User Reviews and Ratings
    - Caterpillar Forklift T50b Need Serial Number Service Manual and Bestseller Lists
5. Accessing Caterpillar Forklift T50b Need Serial Number Service Manual Free and Paid eBooks
    - Caterpillar Forklift T50b Need Serial Number Service Manual Public Domain eBooks
    - Caterpillar Forklift T50b Need Serial Number Service Manual eBook Subscription Services
    - Caterpillar Forklift T50b Need Serial Number Service Manual Budget-Friendly Options

6. Navigating Caterpillar Forklift T50b Need Serial Number Service Manual eBook Formats
    - ePub, PDF, MOBI, and More
    - Caterpillar Forklift T50b Need Serial Number Service Manual Compatibility with Devices
    - Caterpillar Forklift T50b Need Serial Number Service Manual Enhanced eBook Features
7. Enhancing Your Reading Experience
    - Adjustable Fonts and Text Sizes of Caterpillar Forklift T50b Need Serial Number Service Manual
    - Highlighting and Note-Taking Caterpillar Forklift T50b Need Serial Number Service Manual
    - Interactive Elements Caterpillar Forklift T50b Need Serial Number Service Manual
8. Staying Engaged with Caterpillar Forklift T50b Need Serial Number Service Manual
    - Joining Online Reading Communities
    - Participating in Virtual Book Clubs
    - Following Authors and Publishers Caterpillar Forklift T50b Need Serial Number Service Manual
9. Balancing eBooks and Physical Books Caterpillar Forklift T50b Need Serial Number Service Manual
    - Benefits of a Digital Library
    - Creating a Diverse Reading Collection Caterpillar Forklift T50b Need Serial Number Service Manual
10. Overcoming Reading Challenges
    - Dealing with Digital Eye Strain
    - Minimizing Distractions
    - Managing Screen Time
11. Cultivating a Reading Routine Caterpillar Forklift T50b Need Serial Number Service Manual
    - Setting Reading Goals Caterpillar Forklift T50b Need Serial Number Service Manual
    - Carving Out Dedicated Reading Time
12. Sourcing Reliable Information of Caterpillar Forklift T50b Need Serial Number Service Manual
    - Fact-Checking eBook Content of Caterpillar Forklift T50b Need Serial Number Service Manual
    - Distinguishing Credible Sources
13. Promoting Lifelong Learning
    - Utilizing eBooks for Skill Development
    - Exploring Educational eBooks
14. Embracing eBook Trends
    - Integration of Multimedia Elements

- Interactive and Gamified eBooks

Caterpillar Forklift T50b Need Serial Number Service Manual Introduction

In the digital age, access to information has become easier than ever before. The ability to download Caterpillar Forklift T50b Need Serial Number Service Manual has revolutionized the way we consume written content. Whether you are a student looking for course material, an avid reader searching for your next favorite book, or a professional seeking research papers, the option to download Caterpillar Forklift T50b Need Serial Number Service Manual has opened up a world of possibilities. Downloading Caterpillar Forklift T50b Need Serial Number Service Manual provides numerous advantages over physical copies of books and documents. Firstly, it is incredibly convenient. Gone are the days of carrying around heavy textbooks or bulky folders filled with papers. With the click of a button, you can gain immediate access to valuable resources on any device. This convenience allows for efficient studying, researching, and reading on the go. Moreover, the cost-effective nature of downloading Caterpillar Forklift T50b Need Serial Number Service Manual has democratized knowledge. Traditional books and academic journals can be expensive, making it difficult for individuals with limited financial resources to access information. By offering free PDF downloads, publishers and authors are enabling a wider audience to benefit from their work. This inclusivity promotes equal opportunities for learning and personal growth. There are numerous websites and platforms where individuals can download Caterpillar Forklift T50b Need Serial Number Service Manual. These websites range from academic databases offering research papers and journals to online libraries with an expansive collection of books from various genres. Many authors and publishers also upload their work to specific websites, granting readers access to their content without any charge. These platforms not only provide access to existing literature but also serve as an excellent platform for undiscovered authors to share their work with the world. However, it is essential to be cautious while downloading Caterpillar Forklift T50b Need Serial Number Service Manual. Some websites may offer pirated or illegally obtained copies of copyrighted material. Engaging in such activities not only violates copyright laws but also undermines the efforts of authors, publishers, and researchers. To ensure ethical downloading, it is advisable to utilize reputable websites that prioritize the legal distribution of content. When downloading Caterpillar Forklift T50b Need Serial Number Service Manual, users should also consider the potential security risks associated with online platforms. Malicious actors may exploit vulnerabilities in unprotected websites to distribute malware or steal personal information. To protect themselves, individuals should ensure their devices have reliable antivirus software installed and validate the legitimacy of the websites they are downloading from. In conclusion, the ability to download Caterpillar Forklift T50b Need Serial Number Service Manual has transformed the way we access information. With the convenience, cost-effectiveness, and accessibility it offers, free PDF downloads have become a popular choice for students, researchers, and book lovers worldwide. However, it is

crucial to engage in ethical downloading practices and prioritize personal security when utilizing online platforms. By doing so, individuals can make the most of the vast array of free PDF resources available and embark on a journey of continuous learning and intellectual growth.

FAQs About Caterpillar Forklift T50b Need Serial Number Service Manual Books

1. Where can I buy Caterpillar Forklift T50b Need Serial Number Service Manual books? Bookstores: Physical bookstores like Barnes & Noble, Waterstones, and independent local stores. Online Retailers: Amazon, Book Depository, and various online bookstores offer a wide range of books in physical and digital formats.
2. What are the different book formats available? Hardcover: Sturdy and durable, usually more expensive. Paperback: Cheaper, lighter, and more portable than hardcovers. E-books: Digital books available for e-readers like Kindle or software like Apple Books, Kindle, and Google Play Books.
3. How do I choose a Caterpillar Forklift T50b Need Serial Number Service Manual book to read? Genres: Consider the genre you enjoy (fiction, non-fiction, mystery, sci-fi, etc.). Recommendations: Ask friends, join book clubs, or explore online reviews and recommendations. Author: If you like a particular author, you might enjoy more of their work.
4. How do I take care of Caterpillar Forklift T50b Need Serial Number Service Manual books? Storage: Keep them away from direct sunlight and in a dry environment. Handling: Avoid folding pages, use bookmarks, and handle them with clean hands. Cleaning: Gently dust the covers and pages occasionally.
5. Can I borrow books without buying them? Public Libraries: Local libraries offer a wide range of books for borrowing. Book Swaps: Community book exchanges or online platforms where people exchange books.
6. How can I track my reading progress or manage my book collection? Book Tracking Apps: Goodreads, LibraryThing, and Book Catalogue are popular apps for tracking your reading progress and managing book collections. Spreadsheets: You can create your own spreadsheet to track books read, ratings, and other details.
7. What are Caterpillar Forklift T50b Need Serial Number Service Manual audiobooks, and where can I find them? Audiobooks: Audio recordings of books, perfect for listening while commuting or multitasking. Platforms: Audible, LibriVox, and Google Play Books offer a wide selection of audiobooks.
8. How do I support authors or the book industry? Buy Books: Purchase books from authors or independent bookstores. Reviews: Leave reviews on platforms like Goodreads or Amazon. Promotion: Share your favorite books on social media or recommend them to friends.

9. Are there book clubs or reading communities I can join? Local Clubs: Check for local book clubs in libraries or community centers. Online Communities: Platforms like Goodreads have virtual book clubs and discussion groups.
10. Can I read Caterpillar Forklift T50b Need Serial Number Service Manual books for free? Public Domain Books: Many classic books are available for free as theyre in the public domain. Free E-books: Some websites offer free e-books legally, like Project Gutenberg or Open Library.

Find Caterpillar Forklift T50b Need Serial Number Service Manual :

~~d:\64.140.158.11\full1_001123.txt~~
cz 82 printable manual
~~cycle two mosaic books 5-8 of the harbingers series~~
d:\64.140.158.11\kw_000004.txt
cyprian the bishop cyprian the bishop
d11 manual
~~cytohistology serous membranes tissue samples~~
d:\64.140.158.11\full1_000117.txt
d:\64.140.158.11\full1_000216.txt
d:\64.140.158.11\full1_000983.txt
cytomegalovirus a hospitalization diary forms of living fup
d:\64.140.158.11\full1_001307.txt
d:\64.140.158.11\full1_001057.txt
d:\64.140.158.11\full1_001119.txt
d:\64.140.158.11\full1_001133.txt

Caterpillar Forklift T50b Need Serial Number Service Manual :

The Scapegoat Complex: Toward a Mythology ... - Google Books The Scapegoat Complex: Toward a Mythology ... - Google Books Scapegoat Complex, The (Studies in Jungian Psychology ... ... scapegoats for family ills. Perera posits the view that the scapegoat complex has its roots in ancient goddess mythology. I am interested in this complex ... The Scapegoat Complex: Toward a Mythology of Shadow ... I feel so much guilt for deciding to leave my scapegoating parents. After reading this book I efficiently disidentified from the scapegoat identified individual ... By Sylvia Brinton Perera Scapegoat Complex: Toward a

... By Sylvia Brinton Perera Scapegoat Complex: Toward a Mythology of Shadow and Guilt (Studies in Jungian Psychology By Jungian (1st First Edition) [Paperback]. Toward a Mythology of Shadow and Guilt by Sylvia Brinton ... Shows that scapegoating is a way of denying one's own dark side by projecting it onto others. - THE SCAPEGOAT COMPLEX: Toward a Mythology of Shadow and Guilt by ... scapegoat complex The scapegoat complex: Toward a mythology of shadow and guilt ... Sma, WA, U.S.A.. Seller Rating: 5-star rating. Used - Softcover Condition: Good. US$ ... Scapegoat Complex (Studies in Jungian Psychology By ... Shows that scapegoating is a way of denying one's own dark side by projecting it onto others. 2 in stock. Scapegoat Complex (Studies in Jungian Psychology By ... The Scapegoat Complex: Shadow and Guilt “The term scapegoat is applied to individuals and groups who are accused of causing misfortune. Scapegoating means finding those who can be identified with evil ... The scapegoat complex : toward a mythology of shadow and ... The scapegoat complex : toward a mythology of shadow and guilt ; Physical description: 1 online resource (126 pages) ; Series: Studies in Jungian psychology. The scapegoat complex : toward a mythology of shadow ... Nov 11, 2011 — The scapegoat complex : toward a mythology of shadow and guilt ; Publication date: 1986 ; Topics: Scapegoat, Scapegoat, Jungian psychology. 4x4 Manual Locking Hubs 1984 Ford F250 Exploded Diagram Pdf 4x4 Manual Locking Hubs 1984 Ford F250 Exploded Diagram Pdf - Pages :2/6. 4x4 Manual Locking Hubs 1984 Ford F250 Exploded Diagram. Pdf upload Suny u Murray. 2 ... XV109 1980-1984 Ford F250, F350 Dana 50IFS Front ... XV109 1980-1984 Ford F250 and F350 4x4 Dana 50IFS Front Wheel Hub Exploded View is a Free, Original, Detailed Dan the Gear Man® Exploded View showing the ... XV111 1985-1994 Ford F250 Dana 50IFS Front Wheel ... XV111 1985-1994 Ford F250 4x4 Dana 50IFS Front Wheel Hub Exploded View is a Free, Original, Detailed Dan the Gear Man® Exploded View showing the internally ... manual locking hub diagrams Aug 4, 2001 — Does anyone know where i can find an in depth exploded diagram of OEM manual locking hubs on my 1983 F-150. I would like to know the exact ... 600-204XD | 4WD Manual Locking Hub Assembly The original 4WD locking hub on certain Ford and Lincoln SUVs and pickups often fails due to the brittle sintered shift dial breaking. 1983 F 250: locking..hubs..I am trying to replace front rotors Aug 6, 2007 — 1983 F250 4 X 4 with manual locking hubs. I am trying to replace front rotors. How do I get the old rotors off? Return spring behind manual locking hub? That's a pic of an exploded view of a Warn hub from a Bronco site. That spring is pretty much identical to what came out of the hubby's factory F250 hubs. 600-204XD | 4WD Manual Locking Hub Assembly Dorman Products - 600-204XD : 4WD Manual Locking Hub Assembly. The original 4WD locking hub on certain Ford and Lincoln vehicles often breaks or corrodes. 4x4 Lockout Hub Remove and Replace Plus How It Works Common SNMP Vulnerability: 9-Step Guide to Protect Your ... Common SNMP Vulnerability: 9-Step Guide to Protect Your ... SNMPv2 vs. SNMPv3: An SNMP Versions Comparison Table SNMPv1 has very basic security and doesn't include any encryption algorithms. In ... and internet-facing networks to protect against security risks and threats. What are the differences between SNMP v1, v2, and v3? The SNMPv3 architecture introduces the User-based Security Model (USM) for

message security and the View-based Access Control Model (VACM) for access control. SNMPv1 vs. V2c vs. V3 – SNMP Versions Comparison Oct 10, 2022 — Because of its improved security, SNMPv3 is better suited for use on public and Internet-facing networks. V2 is best used only on low-risk, ... SNMPv3 with Security and Administration Security Threats and SNMPv3 Protection Verifies the identify of the message's origin by checking the integrity of the data. Thwarts accidental or intentional ... Security surprises with SNMP v3 Jan 3, 2020 — The lack of encryption in SNMP v1 and v2 allow attackers to capture credentials sent by management tools. Attackers can abuse the weak ... SNMP v2 vs v3 - what are the differences? - Blog - Domotz Feb 28, 2022 — With a focus on improving security, SNMP v3 goes the extra mile to address risks such as eavesdropping and tampering. And it does this ... The Benefits of Using SNMPv3 Over SNMPv2 Oct 4, 2023 — SNMPv3 is the most sophisticated and secure version. Although SNMPv2 – especially SNMPv2u – is advanced and offers enhanced security over SNMPv1 ... SNMP Security Best Practices Jan 9, 2023 — SNMPv2 primarily consists of performance enhancements over the older v1 protocol, but from a security perspective SNMPv1 and v2 are identical. SNMP v2 vs v3: Ensuring a Smooth Transition Sep 4, 2023 — The greatest advantage of SNMPv3, by far, is its vastly improved security features. SNMPv2 offered no encryption or authentication. In SNMPv1 ...